Faberlux 3030

Part of the Faberlux range of lightbars designed for a wide range of commercial applications, Faberlux 3030 uses cylindrical lenses to replicate the iconic 'tube' aesthetic of neon lighting installations.

Profile cross section

UA40564

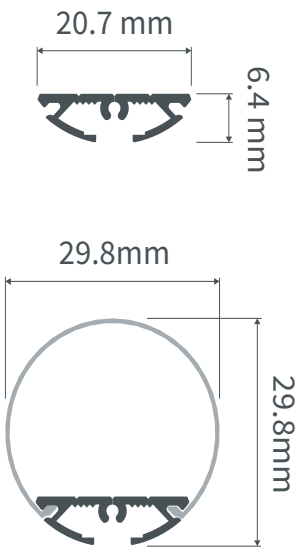

Specifications

Overall dimensions:
Width: 29.8 mm
Height: 29.8 mm
Length: Dependant on LED spec

Material:
Aluminium 6063-T6

Lens type:
Opal

Standard finish:
Satin silver anodised - 15 micron

Profile features

Surface mount

Suspendable

Fixing methods

Screw mount

Magnetic mount